User Guide

Vinten

HD-VRC Robotic Control System

HD-VRC Robotic Control System

Part No. V4063-0013

EN

www.vinten.com

Original Instructions: English

Disclaimer
The information contained in this publication is believed to be correct at the time of printing. Videndum Production Solutions Ltd reserves the right to make changes to the information or specifications without obligation to notify any person of such revision or changes. Changes will be incorporated in new versions of the publication.
We are making every effort to ensure that our publications are updated on a regular basis to reflect changes to product specifications and features. Should this publication not contain information on the core functionality of your product, please let us know. You may be able to access the latest revision of this publication from our website.
Videndum Production Solutions Ltd reserves the right to make changes to product design and functionality without notification.

Trademarks
All product trademarks and registered trademarks are the property of The Videndum Group Plc.
All other trademarks and registered trademarks are the property of their respective companies.

Published by:

Videndum Production Solutions Ltd
Supports Technical Publications Department
Email: technical.publications@videndum.com

Contents

Important Safety Information

Important information on the safe installation and operation of this product. Read this information before operating the product. For your personal safety, read these instructions. Do not operate the product if you do not understand how to use it safely. Save these instructions for future reference.

Warning Symbols Used in these Instructions

Safety cautions are included in these instructions. These safety instructions must be followed to avoid possible personal injury and avoid possible damage to the product.

WARNING!

Where there is a risk of personal injury or injury to others, comments appear supported by the warning triangle symbol.
Where there is a risk of damage to the product, associated equipment, process or surroundings, comments appear supported by the word '**CAUTION**'.

ELECTRIC SHOCK

Where there is a risk of electric shock, comments appear supported by the hazardous voltage warning triangle.

Intended Use

The HD-VRC robotic control system is designed to control compatible robotic camera equipment and accessories. Camera operators can remotely control movements of axes and other functions.

The HD-VRC is designed for use in TV studios and other applications including houses of worship, conference facilities and auditoriums.

Electrical Connection

WARNING! Risk of electric shock. Always disconnect and isolate the product from the power supply before attempting any servicing or removing the covers. Always check cables for signs of damage. Damaged cables can cause personal injury and/or damage the equipment. It is the responsibility of the local organisation to ensure that the product is periodically checked for electrical safety in accordance with local regulations.

CAUTION! This product must be connected to a power supply of the same voltage (V) and current (A) as indicated on the product. Refer to the technical specifications for the product. Using alternative power sources will invalidate the system EMC liability. All connections to other devices must be made using shielded cables.

Operating Environment

WARNING! Slots and openings are intended for ventilation purposes to ensure reliable operation of the product and protect it from overheating. Do not block or cover any slots and openings. Protect the product from water, moisture and dust. The presence of electricity near water can be dangerous.

Mounting and Installation

WARNING! Always ensure that all power and auxiliary communications cables are routed so that they do not present any danger to personnel. Take care when routing cables in areas where robotic equipment is in use.

Cleaning

WARNING! Risk of electric shock. Always disconnect and isolate the product from the power supply before cleaning. Do not use solvent or oil-based cleaners, abrasives or wire brushes. Clean with a dry lint free cloth.

Maintenance

WARNING! The fitting of non-approved parts or accessories, or the carrying out of non-approved alterations or servicing can be dangerous and could affect the safety of the product. It may also invalidate the terms and conditions of the product warranty.

Safety when Working with Robotic Equipment

In normal operation remote-controlled equipment can move suddenly and without warning. Since audible warnings are not suitable for use within the studio environment, it is recommended that only trained personnel be allowed to work in the active areas where remote controlled robotic equipment is located.

The safe operating zone is a minimum of 1 m (3 ft).

Safety Notes for Operators

Operators must familiarise themselves with the working footprint of the robotic equipment, including all installed payload items (lens, zoom and focus controls, viewfinder, prompter, etc.) to prevent inadvertent collisions or injury to personnel.

If personnel are too close to robotic equipment that is about to move, the operator should prevent the motion from starting or stop the motion if it has started.

We strongly recommend that the operator verifies visually that the active area is clear of hazards and personnel, both before and during remote operation.

About this User Guide

This user guide covers the installation and basic operation of the hardware components of the HD-VRC robotic control system.

For information on the configuration and operation of the VRC application software, refer to the **VRC System User Guide, part no. V4063-4980**.

Box Contents

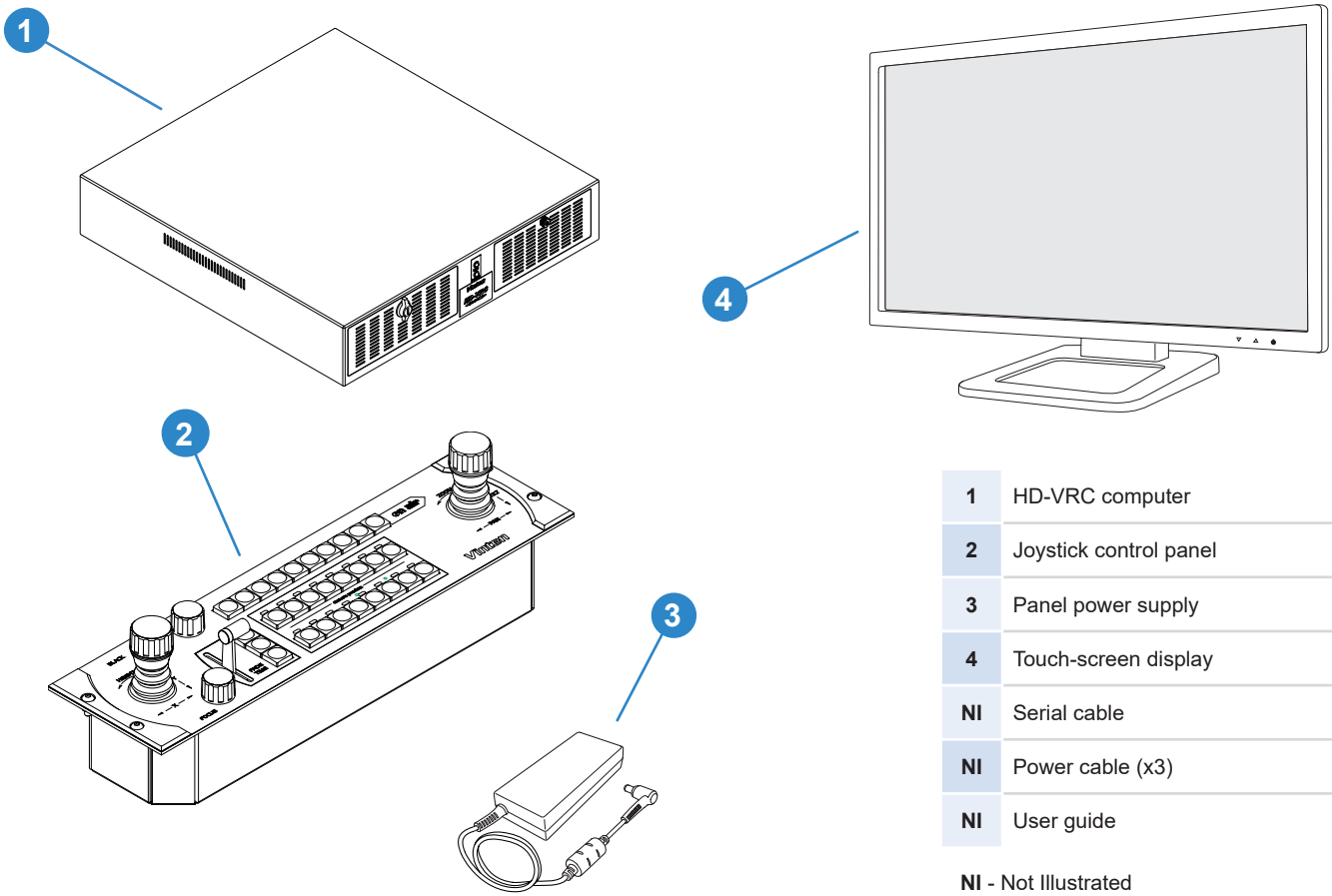

1	HD-VRC computer
2	Joystick control panel
3	Panel power supply
4	Touch-screen display
NI	Serial cable
NI	Power cable (x3)
NI	User guide

NI - Not Illustrated

Touch-screen Components and Connections

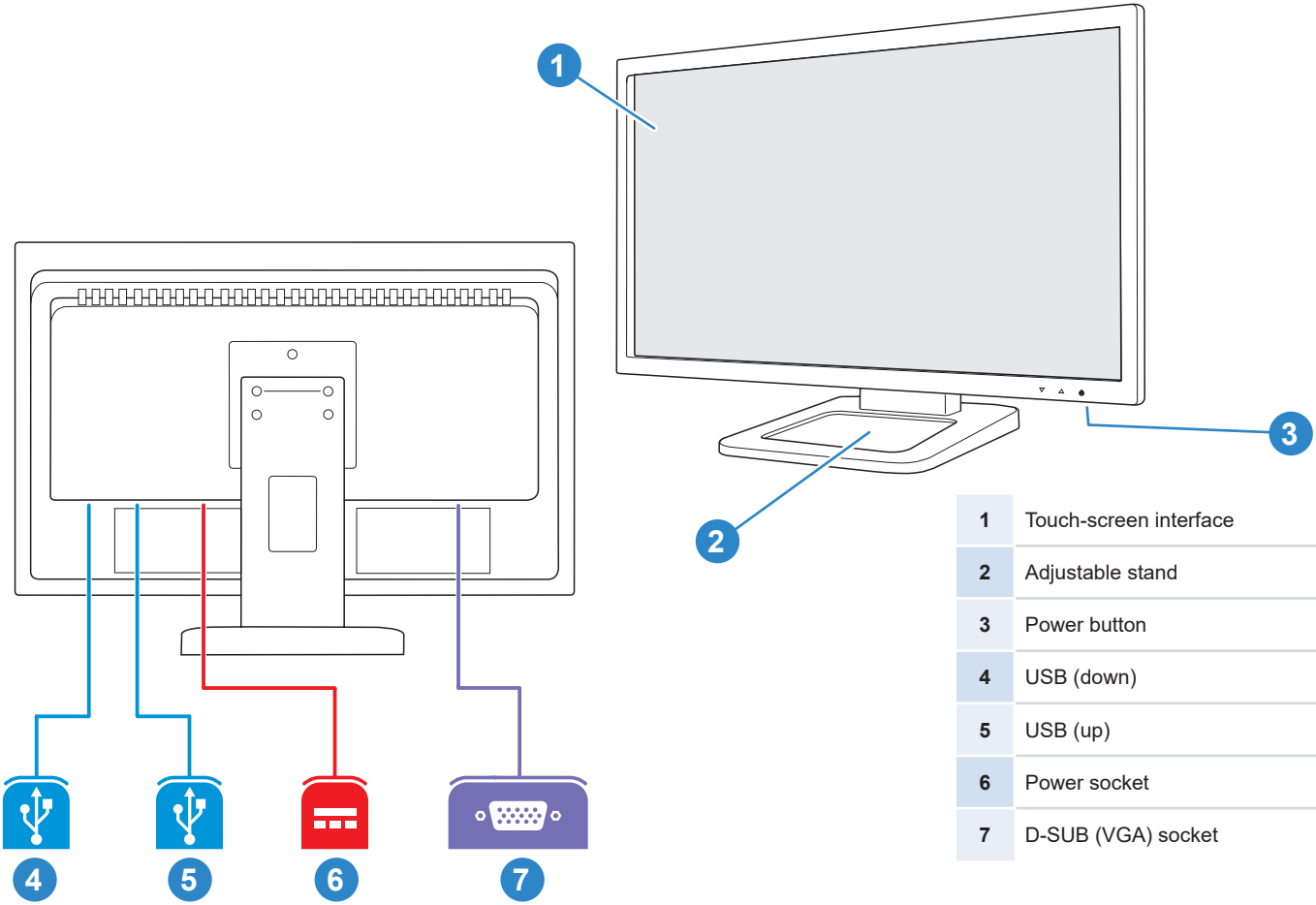

1	Touch-screen interface
2	Adjustable stand
3	Power button
4	USB (down)
5	USB (up)
6	Power socket
7	D-SUB (VGA) socket

Joystick Panel Controls

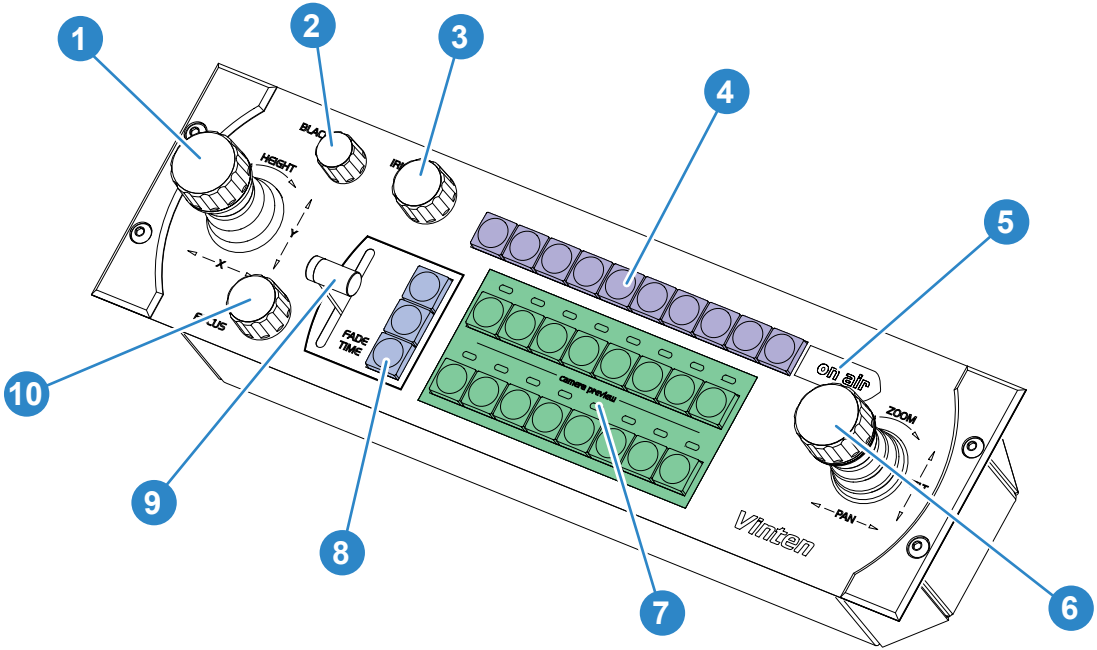

1	X/Y/Height joystick control*	6	Pan/Tilt/Zoom joystick control
2	CCU black level control*	7	Camera selection buttons and tally indicators (x16)
3	CCU iris control*	8	Camera control buttons (Cut/Fade/Stop)
4	Function buttons*	9	Fade time control
5	“on air” indicator	10	Focus control

*Control and button functions are not present on all panel models. See....

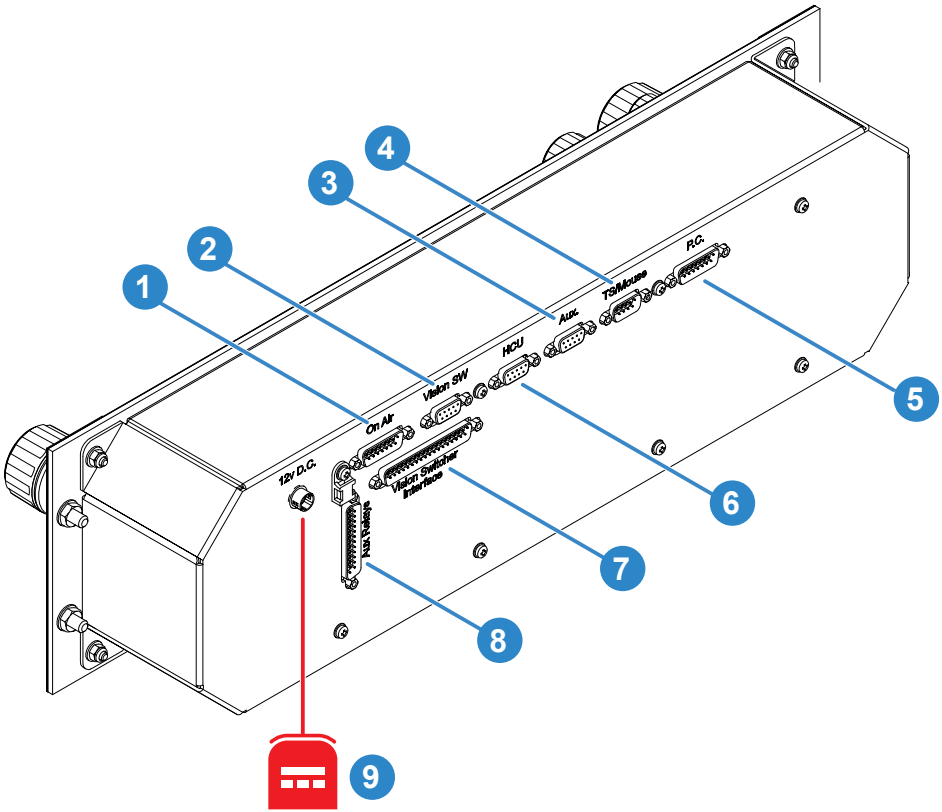

1	Tally socket
2	Vision switcher socket (serial)
3	Auxiliary socket
4	Touch-screen socket
5	PC socket
6	HCU socket
7	Vision switcher socket (parallel)
8	Auxiliary relays socket
9	Power socket (12V DC)

Joystick Panel Variants

Different variant models of the joystick control panel are available to match the requirements of the user and the complexity of the VRC system installation.

Panels are available with or without pedestal controls (X/Y/Z) and CCU controls. There are also options for left or right mounting of the focus control.

Name	Part No.	X/Y/Z (height) Control	Camera buttons	CCU controls	Focus control position
VRC-SJP focus LHS	V3976-0013		16		Left
VRC-SJP focus RHS	V3976-0017		16		Right
VRC-DJP focus LHS	V3976-0014	✓	16		Left
VRC-DJP focus RHS	V3976-0018	✓	16		Right
VRC-SJP+CCU focus LHS	V3976-0015		16	✓	Left
VRC-SJP+CCU focus RHS	V3976-0019		16	✓	Right
VRC-DJP+CCU focus LHS	V3976-0016	✓	16	✓	Left
VRC-DJP+CCU focus RHS	V3976-0020	✓	16	✓	Right
MJP+CCU	V4008-0003		12	✓	N/A

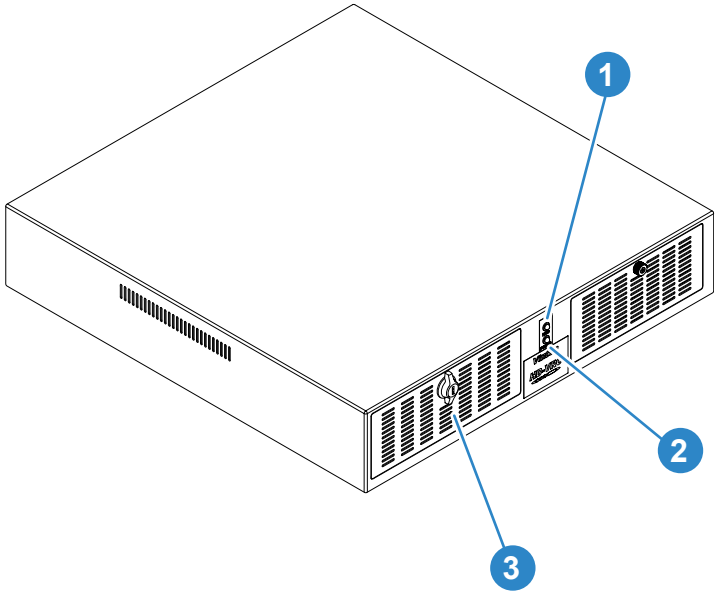

1	HDD indicator
2	Power indicator
3	Lockable DVD drive access panel

HD-VRC Computer Connections

Previous Version

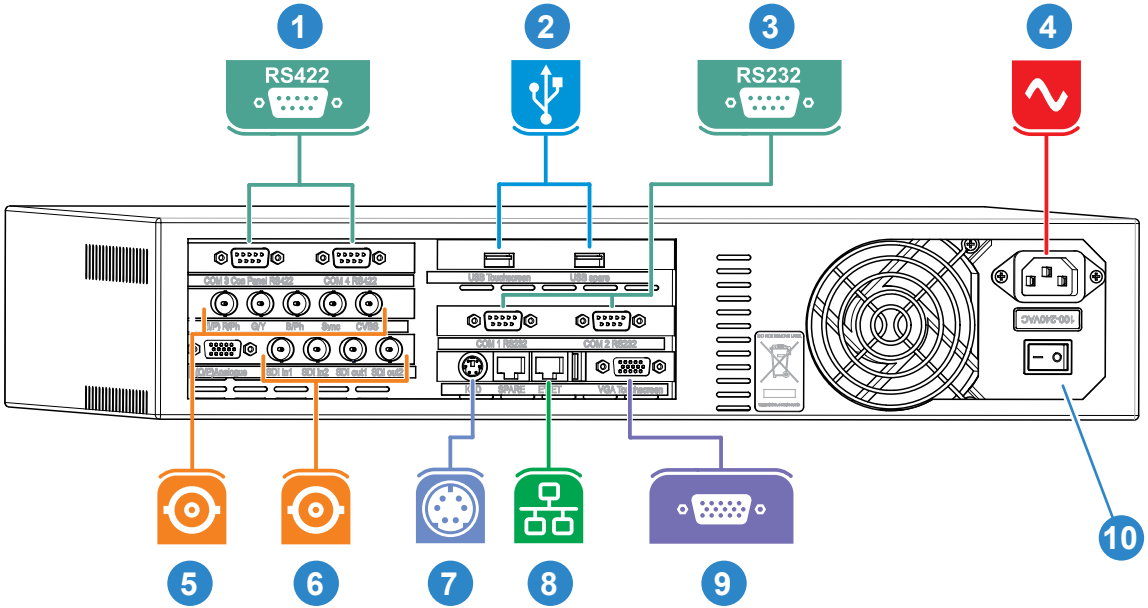

1	RS422 serial sockets (COM3&4)	5	Component video sockets	9	VGA socket (to touch-screen)
2	USB sockets (x2)	6	SDI (IN/OUT) video sockets	10	AC power switch
3	RS232 serial sockets (COM1&2)	7	PS2 keyboard socket		
4	AC power socket	8	Ethernet socket		

Current Version

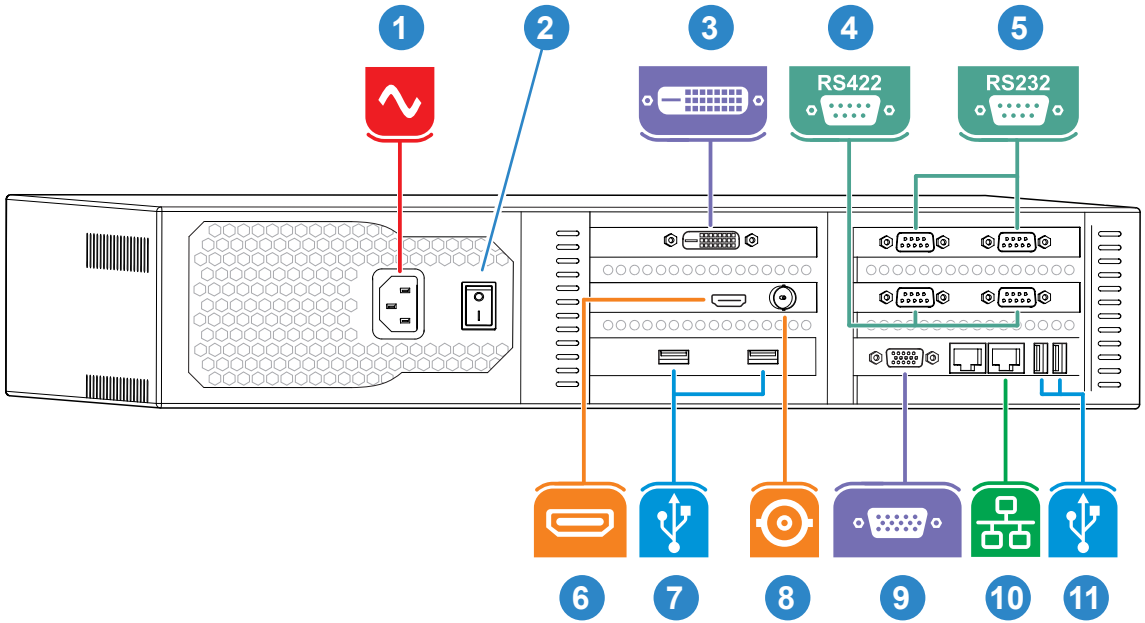

1	AC power socket	5	RS232 serial sockets (COM1&2)	9	VGA socket (to touch-screen)
2	AC power switch	6	HDMI socket (Video capture)	10	Ethernet socket
3	DVI socket	7	USB sockets (x2)	11	USB sockets (x2)
4	RS422 serial sockets (COM3&4)	8	SDI socket (Video capture)		

Control Connections

The basic HD-VRC control system consists of the HD-VRC computer, touch-screen monitor and joystick control panel connected together. Remote camera equipment is connected using standard Ethernet connections, using a powered Ethernet switch to expand the number of connections available to suit your system requirements.

In larger systems, several VRC computer control systems (including µVRC) may be connected together using Ethernet connections.

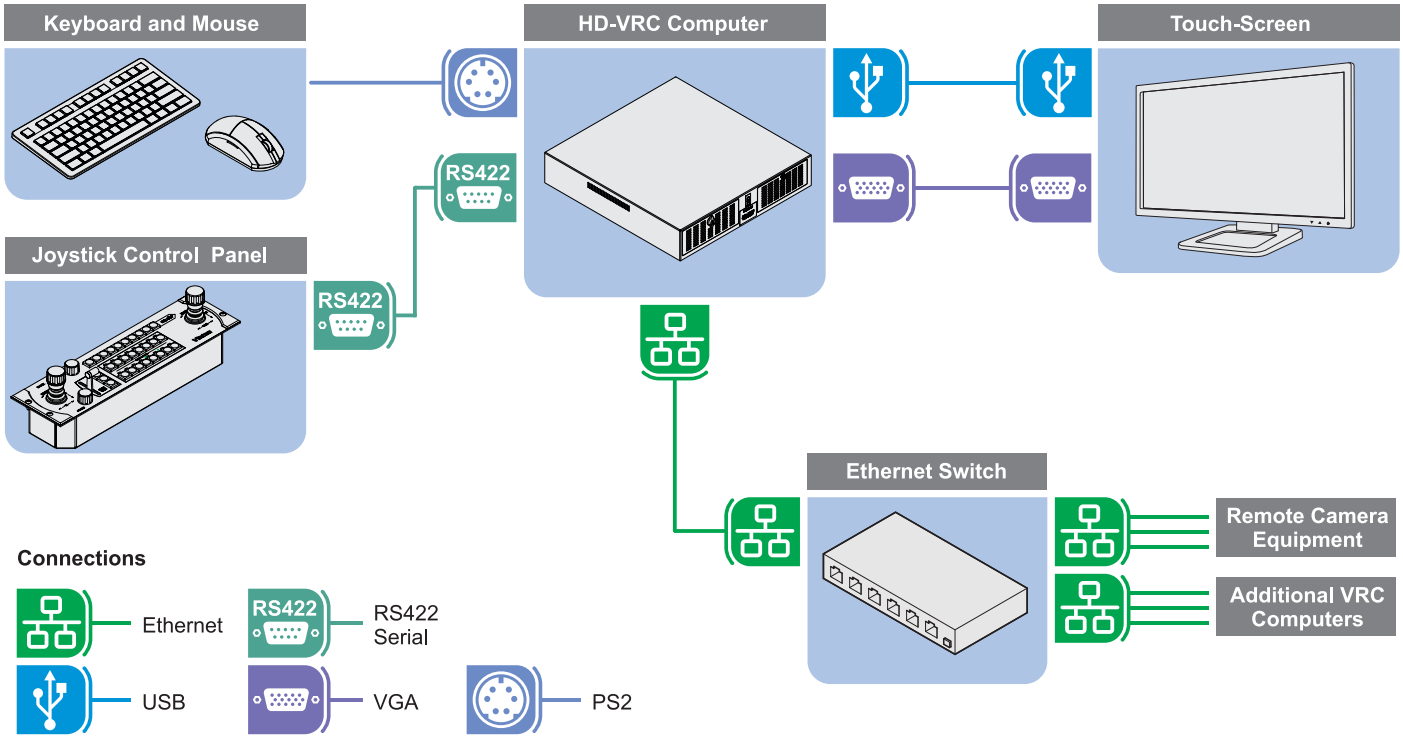

Camera Equipment Connections

Remote camera equipment, including robotic pan and tilt heads, PTZ heads*, pedestals and lens drives can all be connected and controlled by the HD-VRC control system**. All camera equipment must be connected to the same Ethernet network, easily expanded at any time to match your systems requirements.

* To connect PTZ heads, an additional license is required. For more information refer to the **VRC System User Guide, part no. V4063-4980.**

** The HD-VRC must be connected to a control panel variant capable of controlling all functions of the camera equipment required in the system.

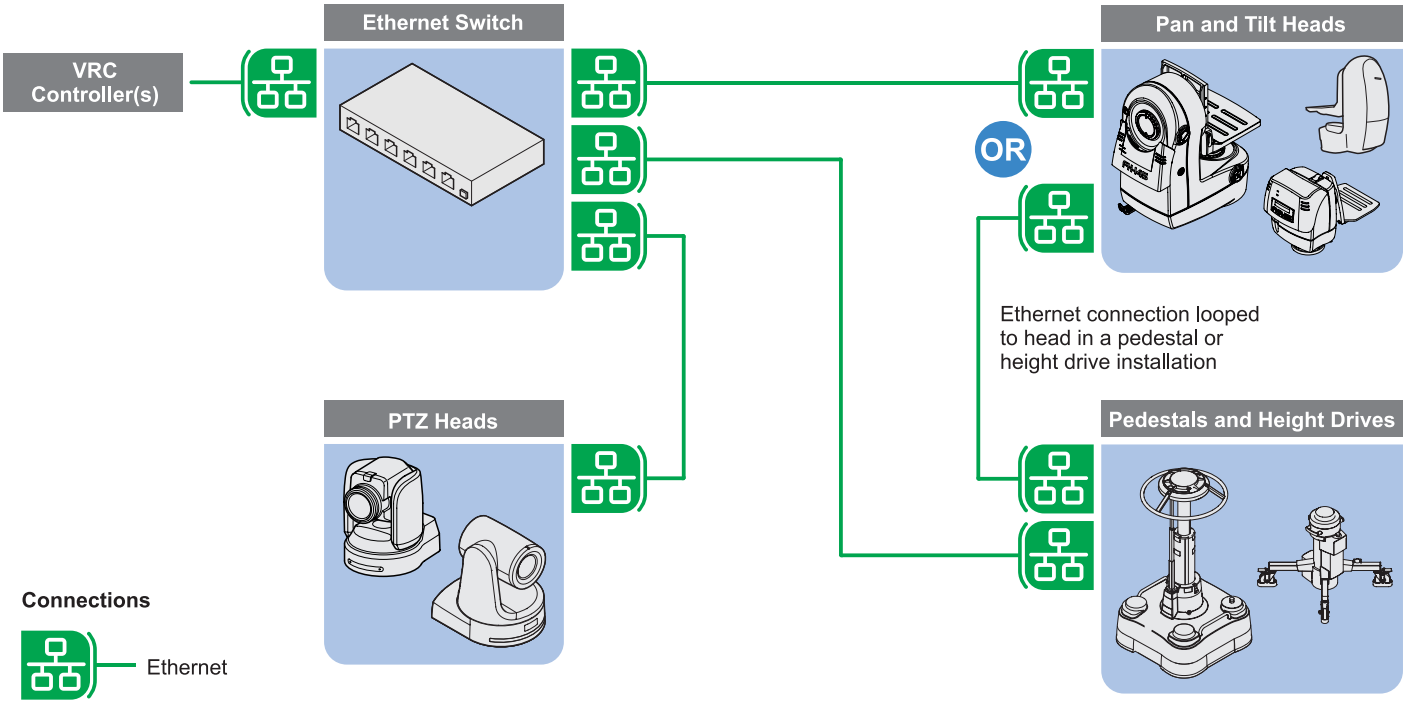

Video and Tally Connections

In a typical HD-VRC control system installation, a video switcher and tally interface are also connected to provide live on-air camera feeds for monitoring purposes and thumbnail video capture.

For more information about connecting devices, refer to the documentation supplied with your video switcher or tally interface.

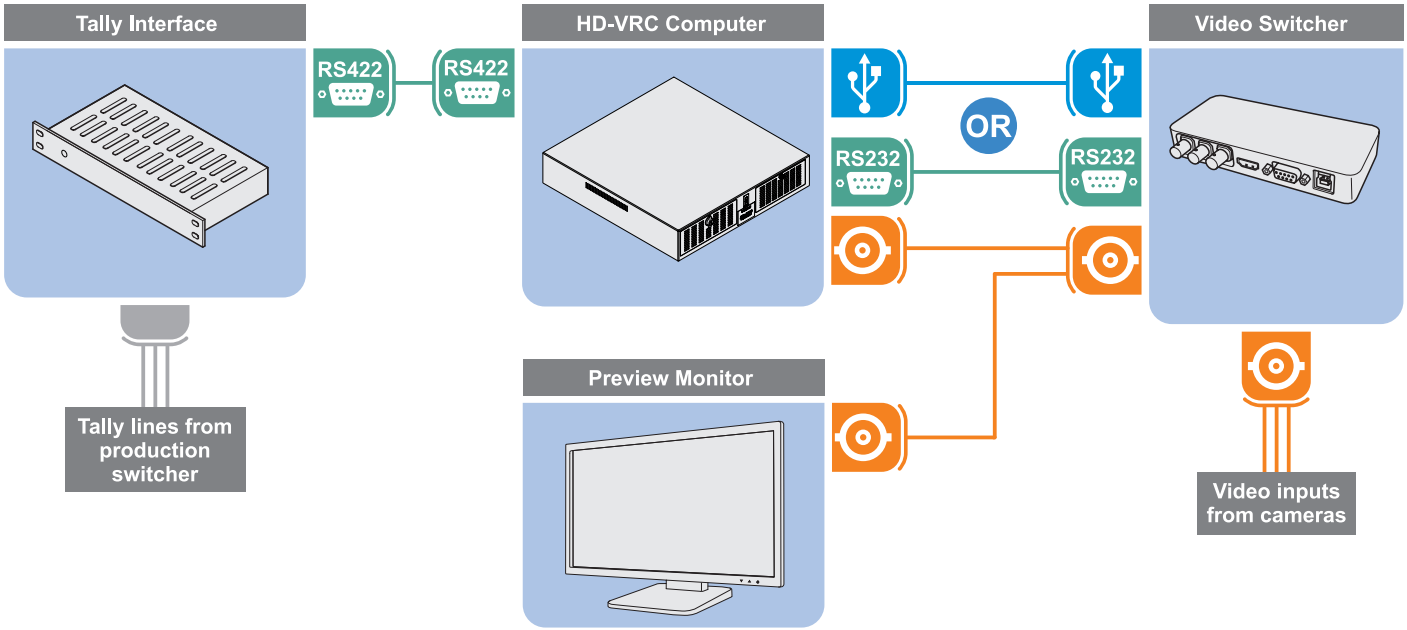

Connections

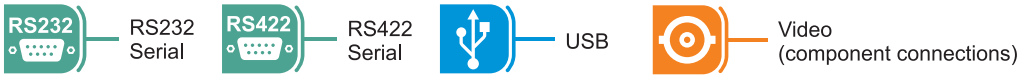

Powering Up

When all connections in the HD-VRC system have been made, the HD-VRC touch-screen, computer and joystick control panel can be powered up.

1. To power up the touch-screen, depress the power button recessed under the front screen bezzel.

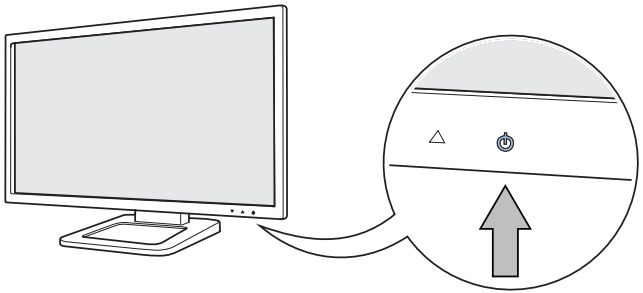

2. To power up the HD-VRC computer, depress the AC power switch on the rear connection panel.

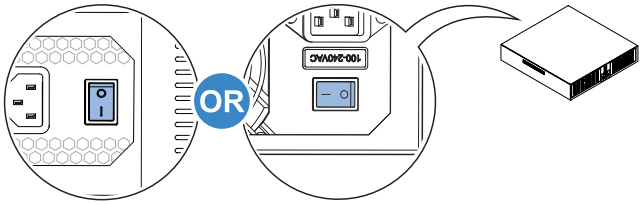

3. The joystick control panel powers up automatically when DC power is applied.

Launching the VRC System Application

When the HD-VRC computer has booted up, the VRC system application must be installed, configured and launched before robotic cameras can be controlled.

For more information on the VRC system application, refer to the **VRC System User Guide, part no. V4063-4980.**

Using the HD-VRC

The HD-VRC user interface consists of a touch-screen display and a joystick control panel, through which all functions and operations can be utilised.

Using the Joystick Control Panel

The joystick control panel enables you to select and control connected robotic cameras. Additional keys are available to select cameras and other useful functions.

Joystick Control Panel Buttons

The joystick control panel has a selection of useful short cut buttons which duplicate features and functions available on the touch-screen display. The buttons provide quick access to functions when the operator is using the panel to control cameras.

This guide details the use of all control panel variations, and therefore some functions may not be present on your control panel. If a button or control described in the text or illustrations is not present on your control panel, then your model does not support that function. It is also possible that during installation the functionality of the system function buttons has been customised, affecting functions available and their precise location on the panel.

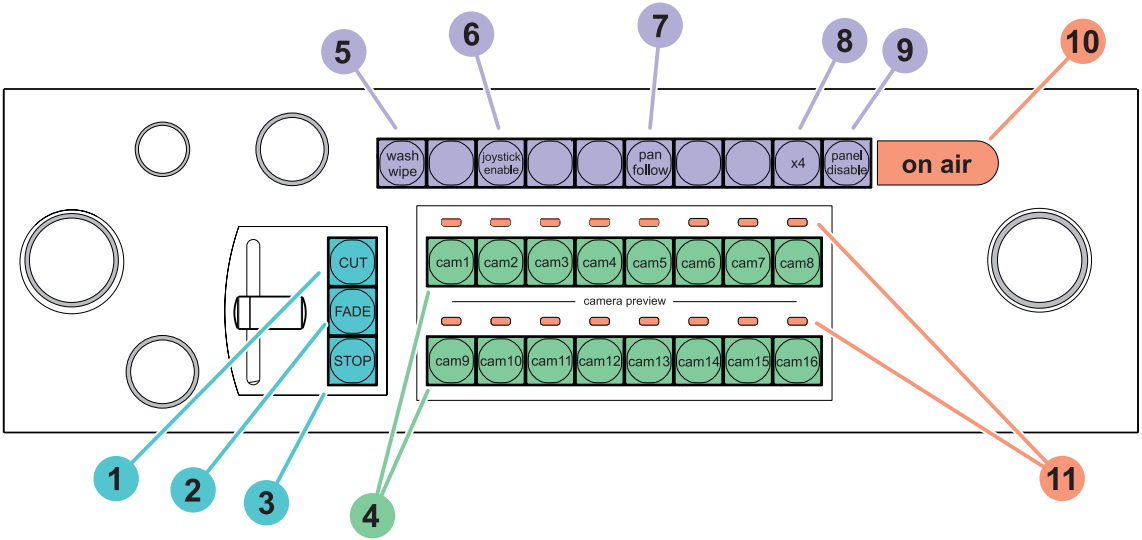

Motion Control Buttons	**1**	**Cut**	Moves to the next selected shot in the fastest possible time
	2	**Fade**	Moves to the next selected shot in the selected time
	3	**Stop**	Stops all camera movement
Camera Buttons	**4**	**Camera Selection**	Selects the camera to control (up to 16 selections)
Function Buttons	**5**	**Wash/wipe**	(Optional) - activates a lens wiper on an outside camera
	6	**Joystick enable**	Enables X/Y pedestal movement (prevents accidental movement when off)
	7	**Pan follow**	When enabled, controlling the Y axis causes the pedestal to travel forwards and backwards in the direction that the camera is pointing
	8	**X4**	Disables zoom proportional mode - with X4 enabled, pan and tilt movements are more sensitive when zoomed in
	9	**Panel disable**	Locks all other controls on the panel to prevent accidental operation
Indications	**10**	**On air**	Indicates that the panel is controlling live cameras when illuminated
	11	**Tally indicators**	Indicators show which camera's video signal is currently live on air

Joystick Camera Controls

The joystick panel provides the best way to smoothly control camera movement and adjustments. Many control functions can be reversed in the VRC application configuration to suit a users preferences.

Robotic Pedestal, Head and Camera Controls

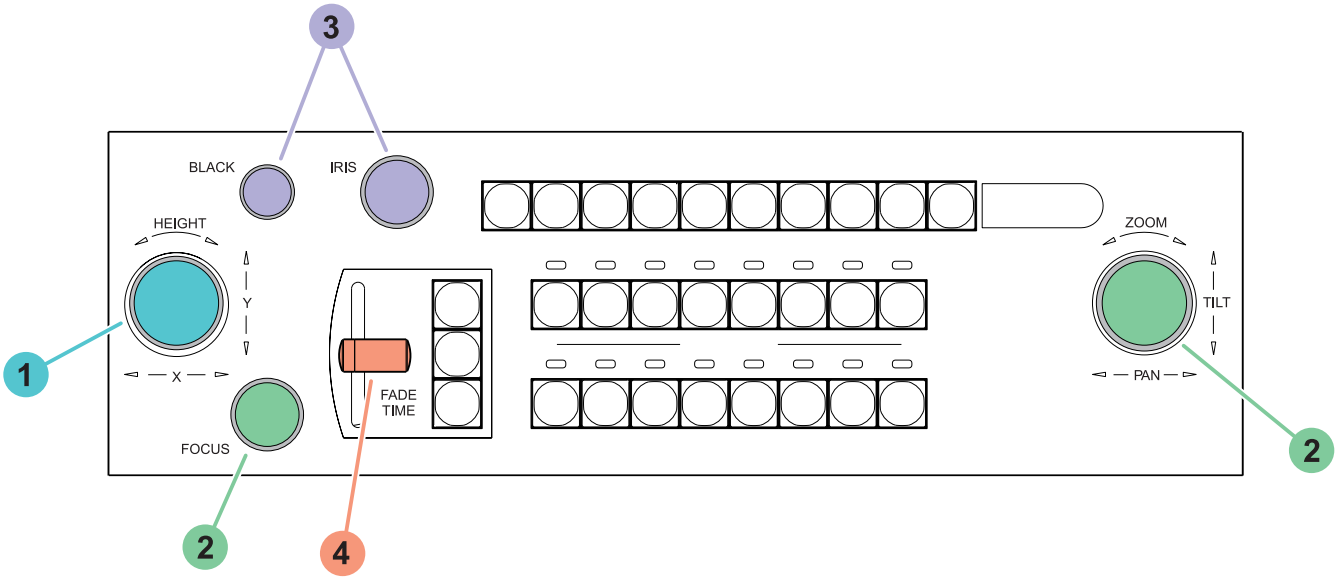

1	Pedestal Movement Controls	X-axis	Moving the joystick left/right will cause the pedestal to travel West/East*
		Y-axis	Moving the joystick forward/back will cause the pedestal to move North/South*
		Z-axis	Rotating the joystick clockwise/counter-clockwise will lower/raise the height column
2	Head Movement Controls	Pan	Moving the joystick left/right will pan the camera left/right
		Tilt	Moving the joystick forward/back will tilt the camera down/up
		Zoom	Rotating the joystick clockwise/counter-clockwise will zoom out/in the camera lens
		Focus	Rotating the Focus knob adjusts the camera lens focus
3	CCU Camera Controls	Black	Rotating the Black knob adjusts the camera's black level
		Iris	Rotating the Iris knob adjusts the camera's black level
4	Time Control	Fade	The fade time is adjusted by moving the Fade bar forward/back (increase/decrease in seconds)

***Pedestal Orientation**

The sides of the pedestal are referred to as North, South, East and West.

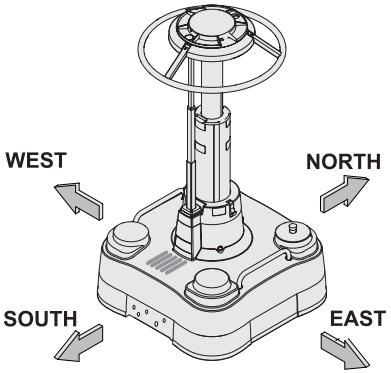

Maintenance

The HD-VRC computer and panel require minimal routine maintenance, apart from regular cleaning and routine checks.

Routine checks

During use, check the following daily:

- Check cables for signs of wear or damage. Replace as necessary.
- Check that all cables are connected properly.

Cleaning

WARNING! Risk of electric shock. Disconnect and isolate the product from the power supply before cleaning.

During normal use the only cleaning required should be a regular wipe over with a dry, lint-free cloth. Dirt accumulated during storage or periods of disuse may be removed with a vacuum cleaner. Particular attention should be paid to all connection ports on the HD-VRC computer.

HD-VRC Computer

Physical Data

Dimensions

Standard 2U rack mount enclosure, depth 450 mm (17.7 in.)

Electrical Data

Power Supply

100-240V AC 400W

Joystick Control Panel

Physical Data

Height

79 mm (3.1 in.) (excludes joystick)

Length

483 mm (19 in.)

Width

131 mm (5.1 in.)

Electrical Data

Power

12V DC

Touch-screen Display

Specification

Refer to the documentation supplied with the product.

Technical specifications are subject to change without notice.

FCC Certification

HD-VRC Robotic
Control System,
V4063-0013

FCC Notice

This product complies with the limits for a Class B digital device, pursuant to Part 15 of the FCC Rules. These limits are designed to provide reasonable protection against harmful interference in a residential installation. This equipment generates, uses and can radiate radio frequency energy and, if not installed and used in accordance with the instructions, may cause harmful interference to radio or television reception, which can be determined by turning the equipment off and on. The user is encouraged to try to correct the interference by one or more of the following measures:

- Reorient or relocate the receiving antenna.
- Increase the separation between the equipment and receiver.
- Connect the equipment into an outlet on a circuit different from that to which the receiver is connected.
- Consult the dealer or an experienced radio/television technician for assistance.

FCC Warning

Changes or modifications not expressly approved by the party responsible for compliance could void the user’s authority to operate the equipment.

FCC Declaration of Conformity

This product complies with Part 15 of the FCC Rules. Operation is subject to the following two conditions:

1. This product may not cause harmful interference.
2. This product must accept any interference received, including interference that may cause undesired operations.

Declaration of Conformity

Videndum Production Solutions Limited declares that this product has been manufactured in accordance with BS EN ISO 9001:2008 and is in compliance with the essential requirements and other relevant provisions of the EC Directives 2014/30/EU EMC. A copy of the Declaration of Conformity is available on request.

Environmental considerations

European Union Waste of Electrical and Electronic Equipment (WEEE) Directive (2012/19/EU)

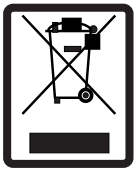

This symbol marked on the product or its packaging indicates that this product must not be disposed of with general household waste. In some countries or European Community regions separate collection systems have been set up to handle the recycling of electrical and electronic waste products. By ensuring this product is disposed of correctly, you will help prevent potentially negative consequences for the environment and human health. The recycling of materials helps conserve natural resources.

Visit our website for information on how to dispose of this product and its packaging.

In countries outside the EU:

Dispose of this product at a collection point for the recycling of electrical and electronic equipment according to your local government regulations.

Pollution statement

This equipment is designed for operation in Pollution Degree 2 environments.

Publication No. V4063-4982/01

Vinten

Vinten
A Videndum plc Brand

www.vinten.com